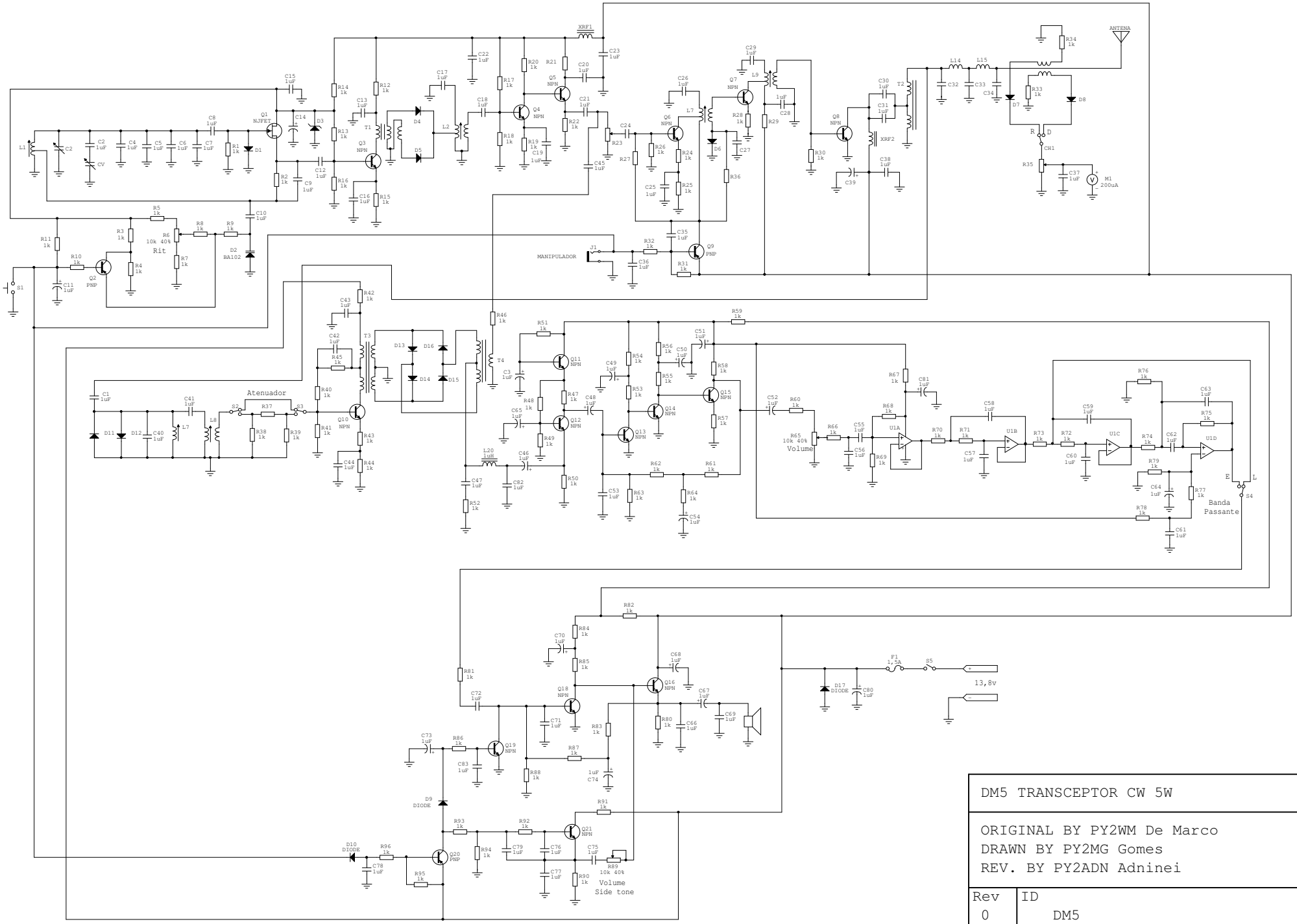

DM5 TRANSCEPTOR CW 5W

ORIGINAL BY PY2WM De Marco
DRAWN BY PY2MG Gomes
REV. BY PY2ADN Adninei

Rev	ID
0	DM5

Date: 02 Janeiro 2010 | Page: 1 of 1